HORIZON FITNESS

CE5.1 PEP515-1US
GS950E PEP517-1US

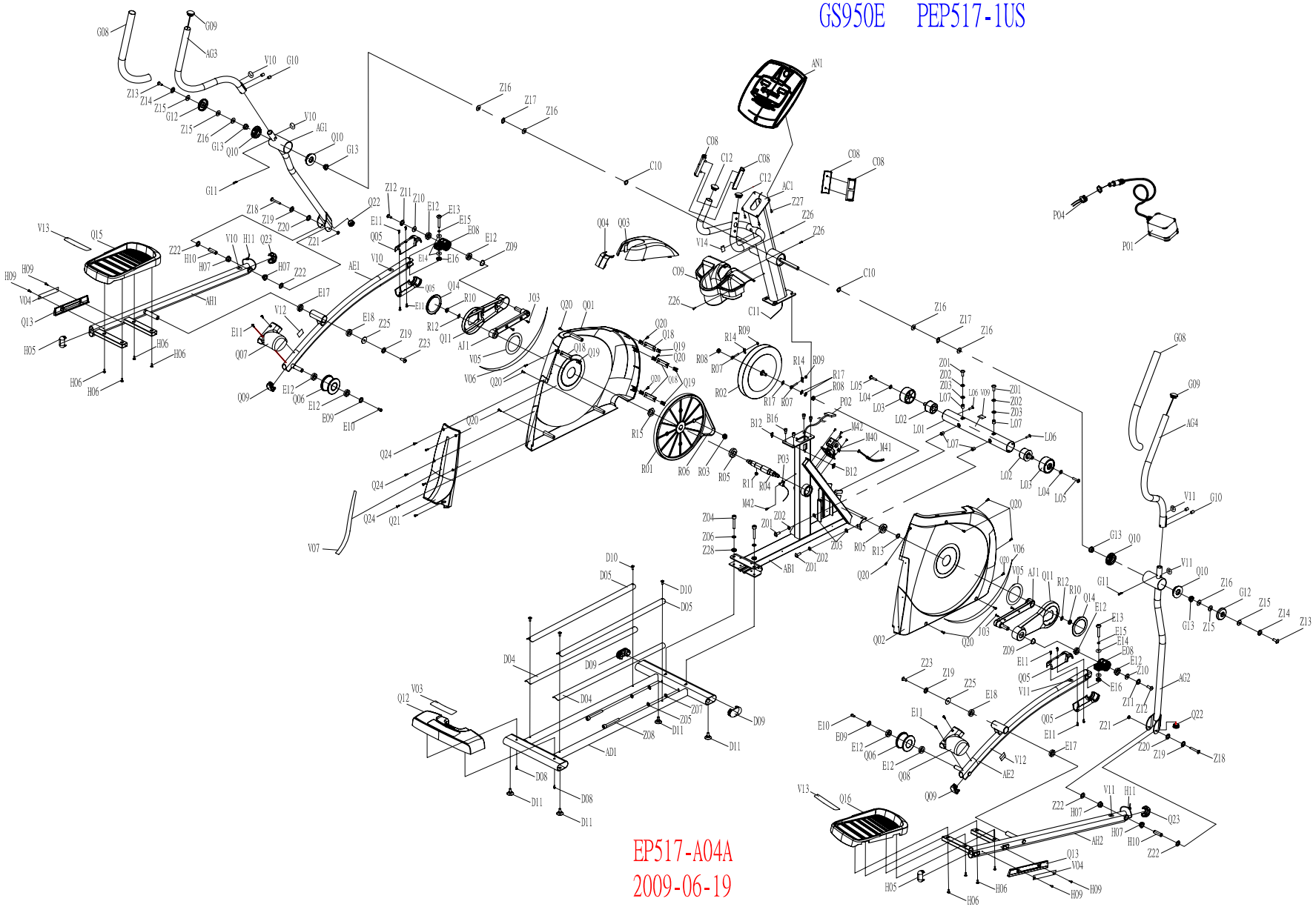

EP517-A04A
2009-06-19